# SCAN 5004 FR

## SPARE PARTS

| Spare parts 5004 FR | | | |
|---|---|---|---|
| Spare part no. | Market name | Scan M3no. | Romotop no. |
| 1 | Screw assortment for SC 5000 series | 12061534 | - |
| 2 | Chamotte chamber set FR | 50053137 | **174K_2010_001** |
| 3 | Handle | 50052740 | **206E_0320_001** |
| 4 | Front glass 4x651,5x466 | 50053133 | **632_999_650_466** |
| 5 | Side glass 4x393x466 | 50053134 | **632_999_393_466** |
| 6 | Glass sealing 15x4 mm, type 7226/5/0/0 - black | 50052730 | **341_414_015_004** |
| 7 | Door gasket 15x8 mm, type 84205/6/8/0/0 - black | 50052732 | **341_414_015_008** |
| 8 | Spray black, 400 ml | 50053535 | - |

# SCAN 5004 FR

## SPARE PARTS

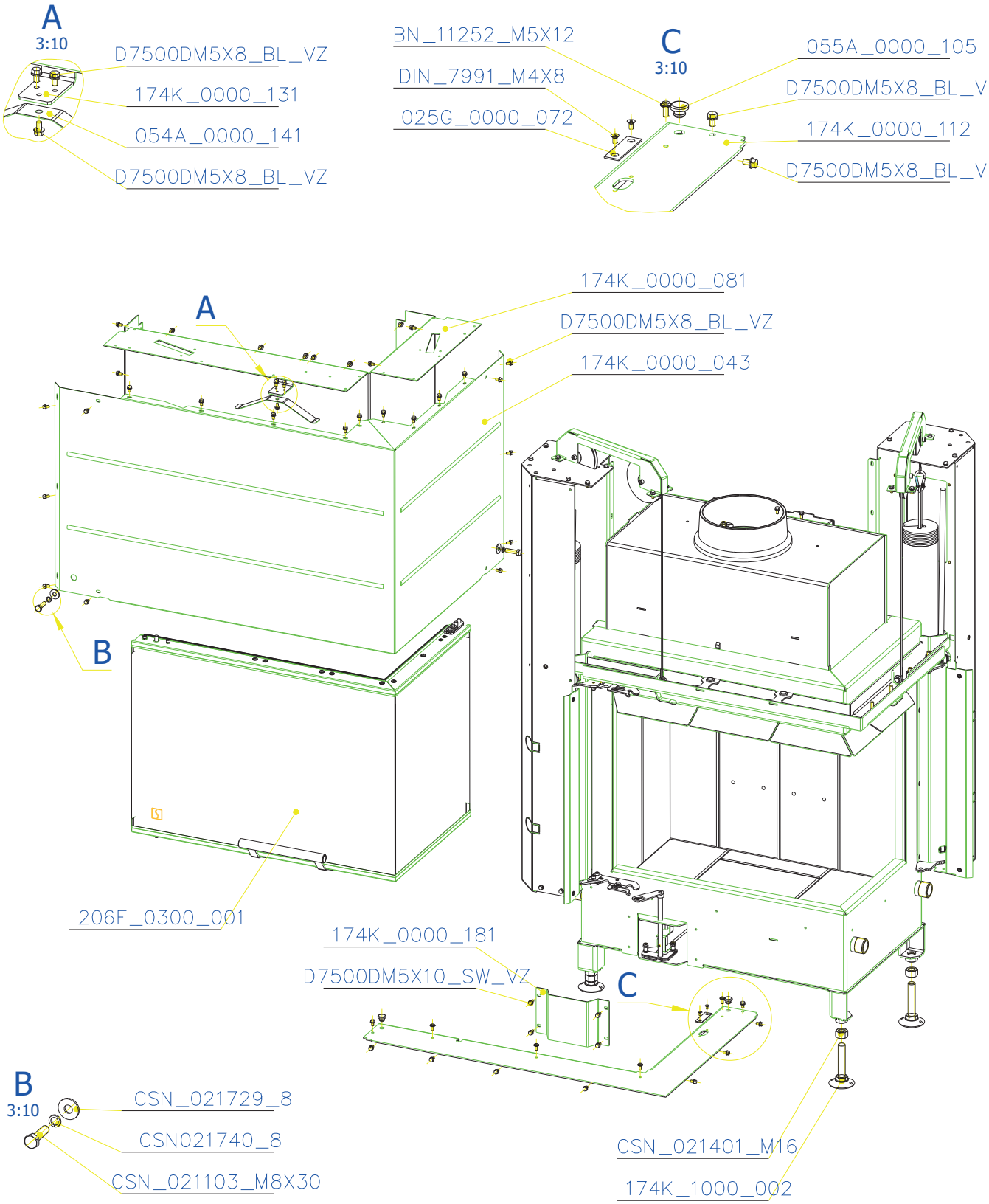

# SCAN 5004 FR

## SPARE PARTS

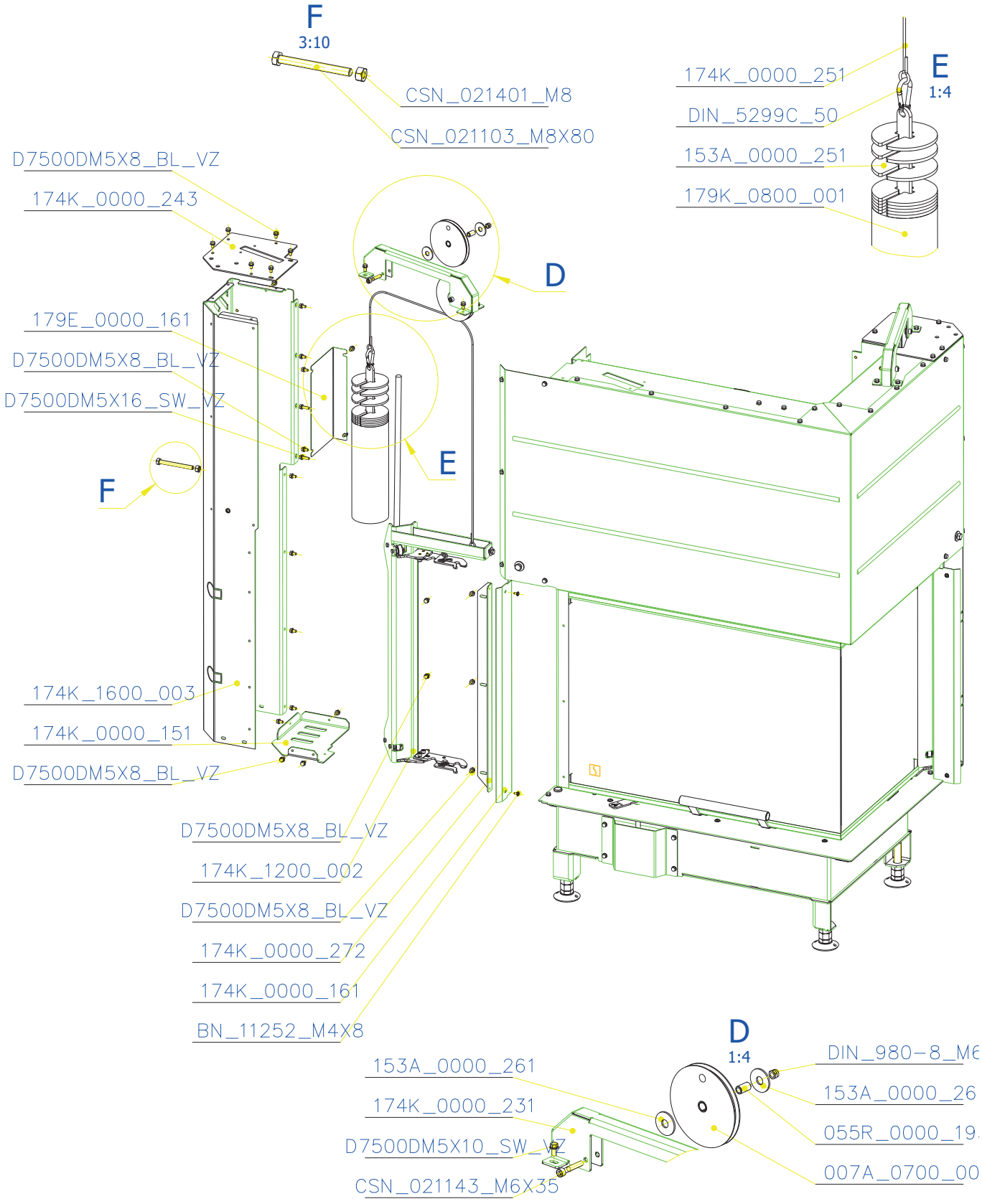

# SCAN 5004 FR

## SPARE PARTS

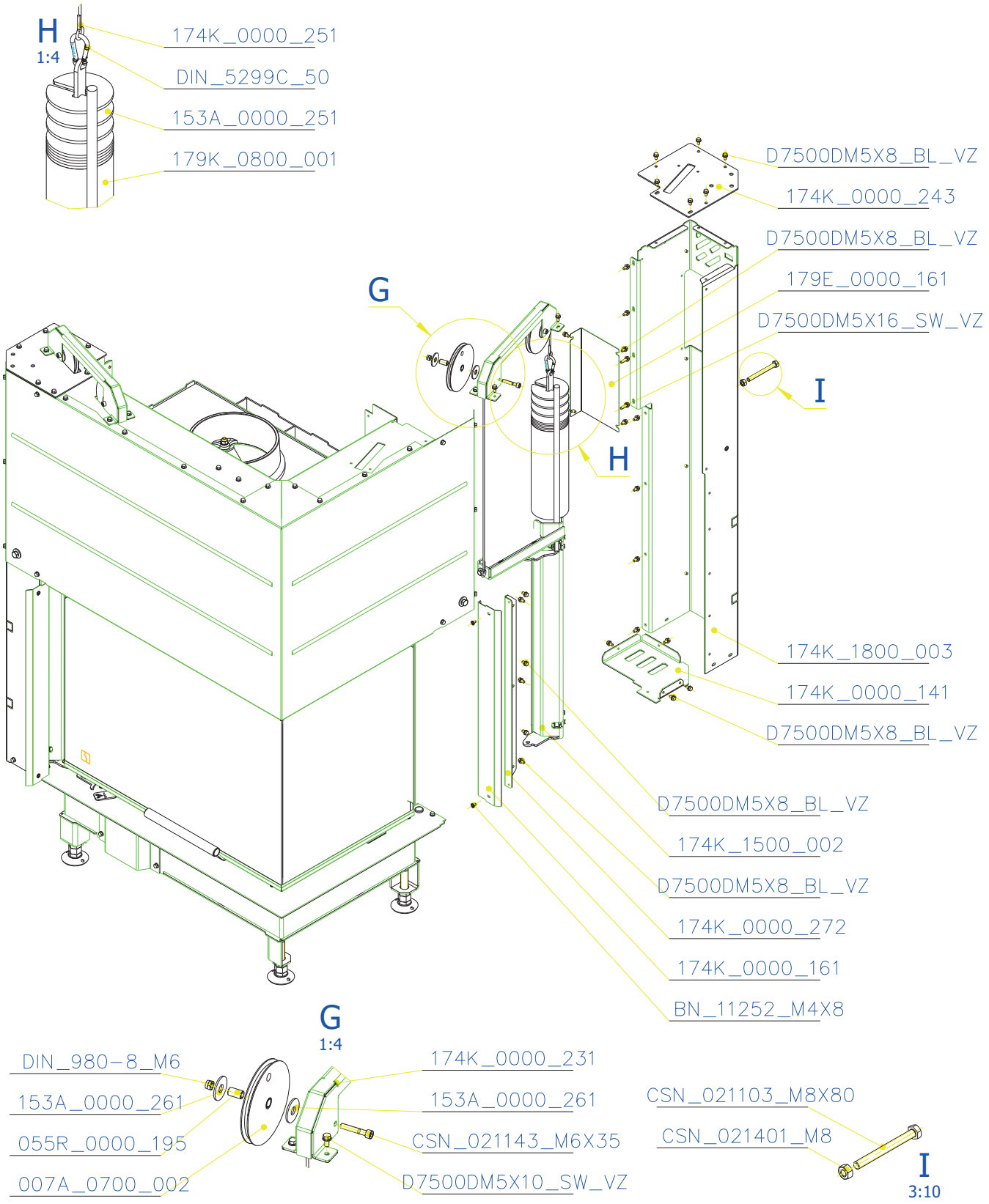

# SCAN 5004 FR

## SPARE PARTS

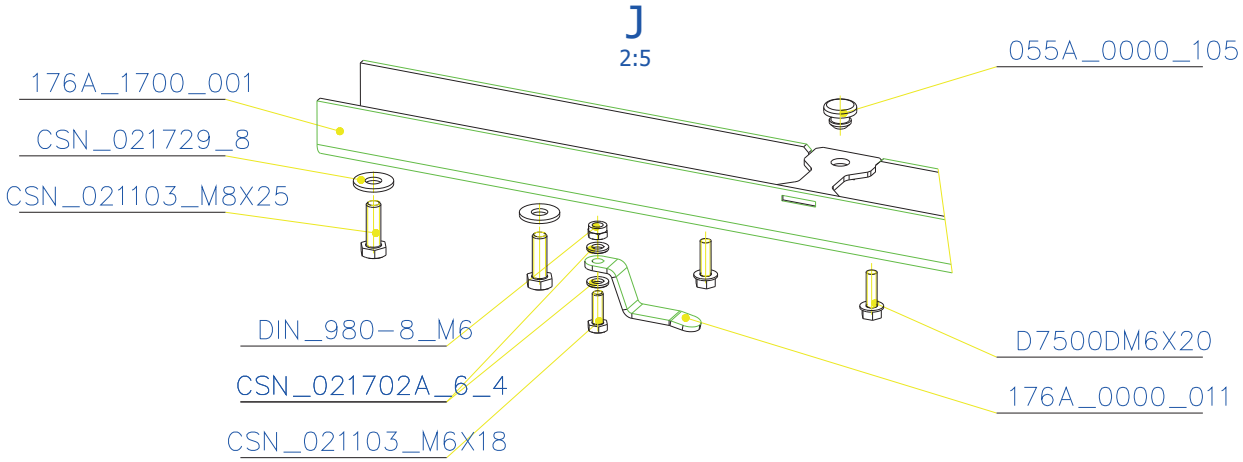


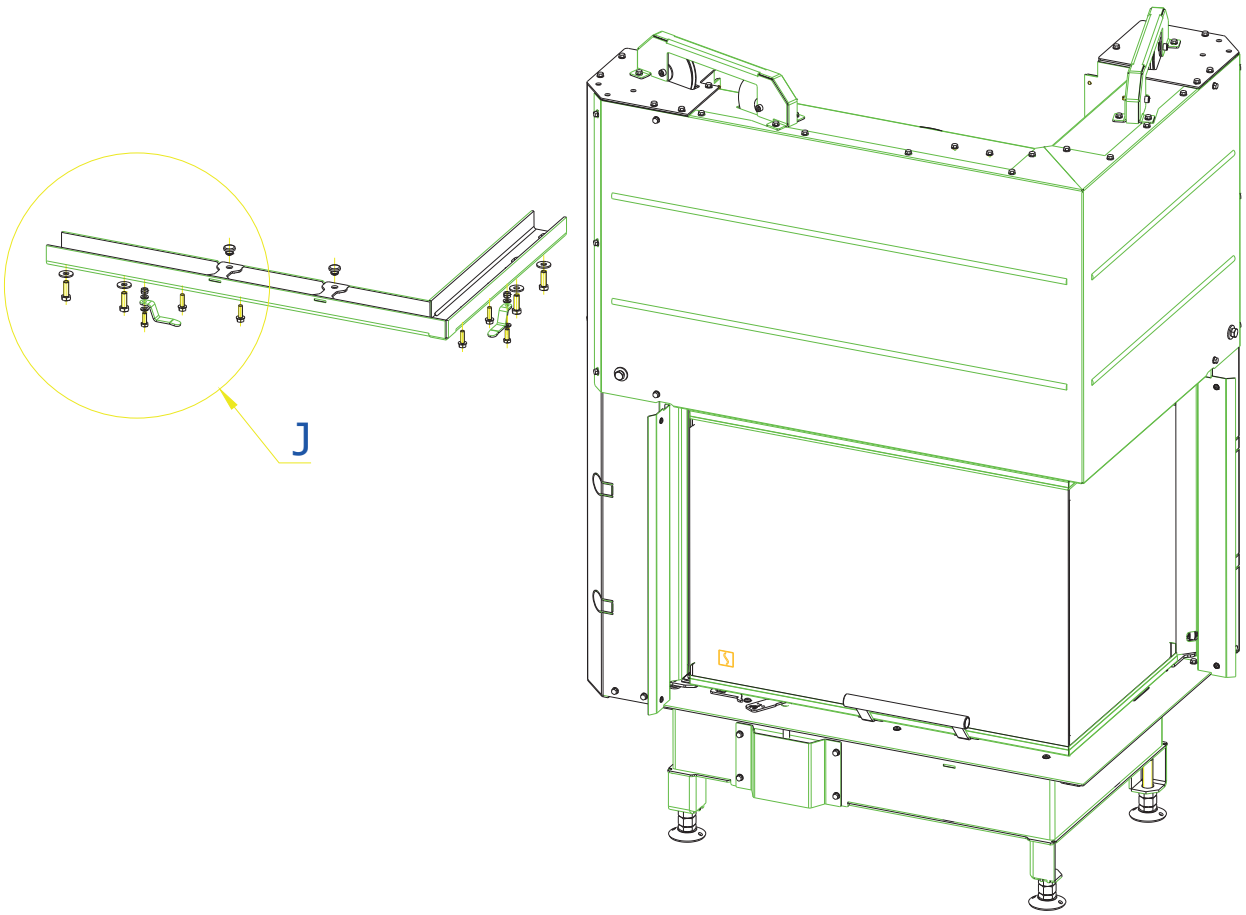

# SCAN 5004 FR

## SPARE PARTS

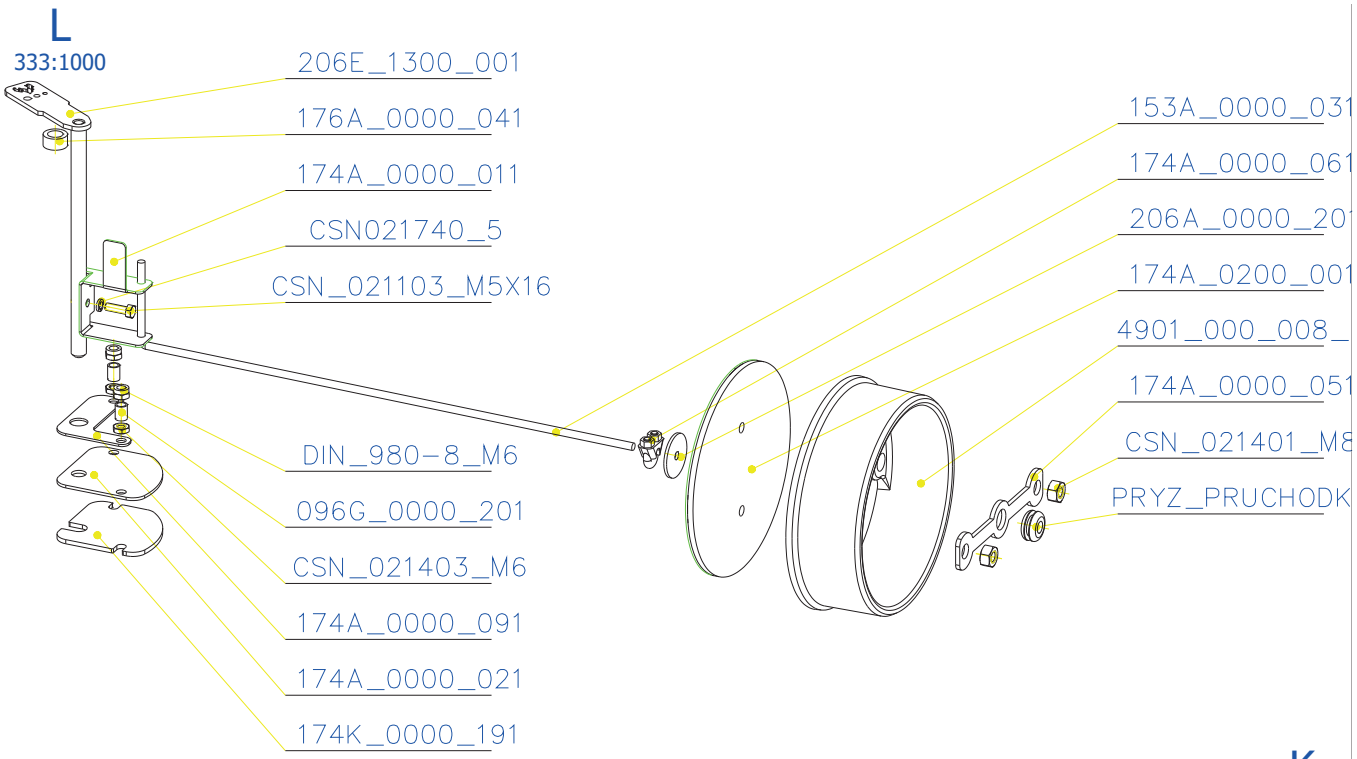


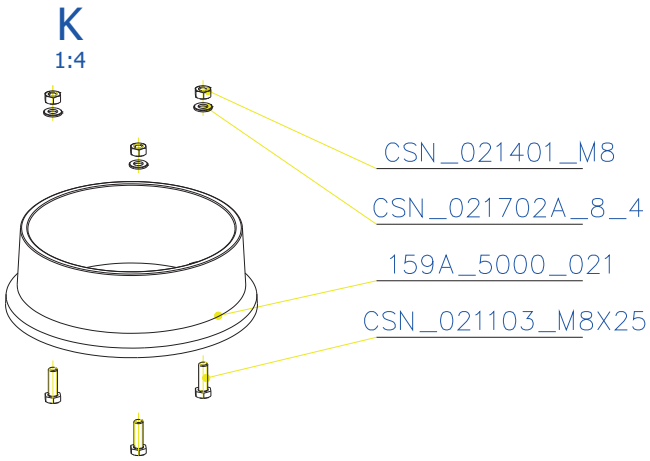


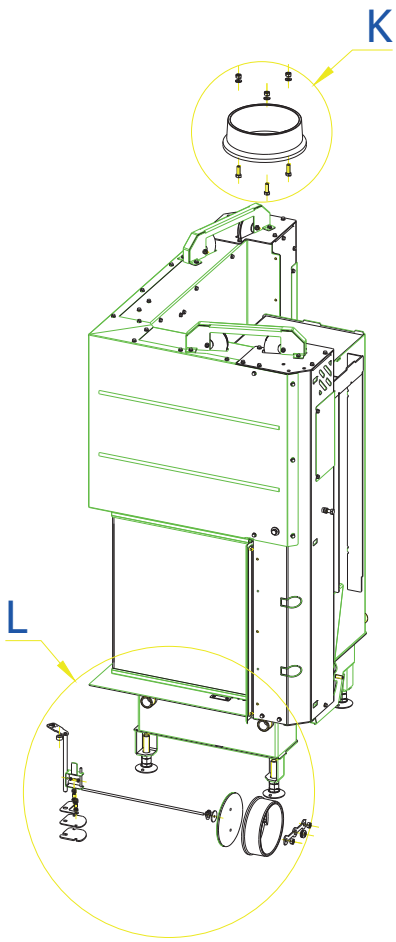

# SCAN 5004 FR

## SPARE PARTS

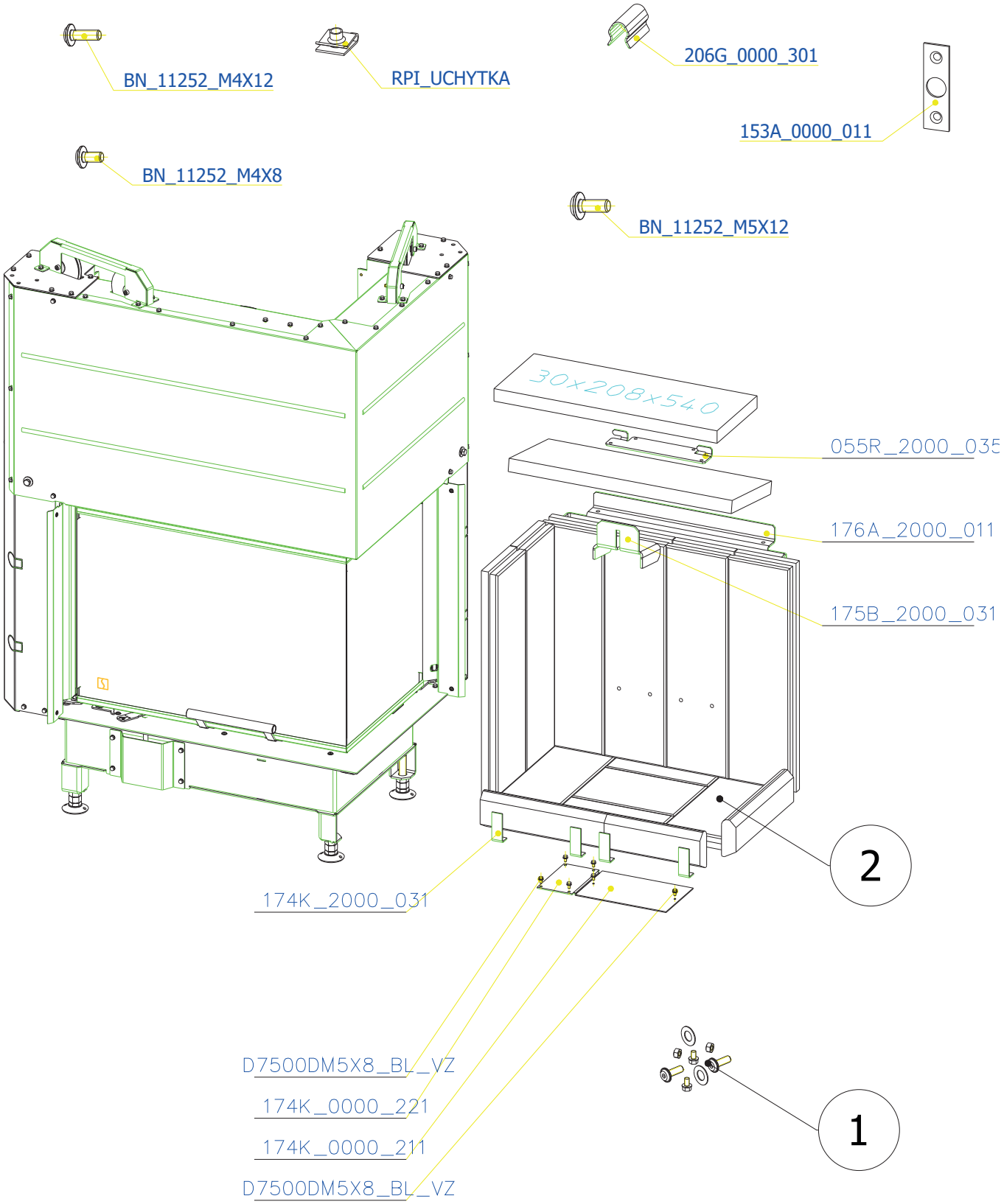

# SCAN 5004 FR

## SPARE PARTS

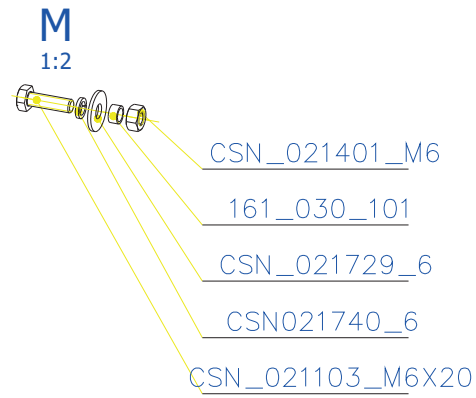


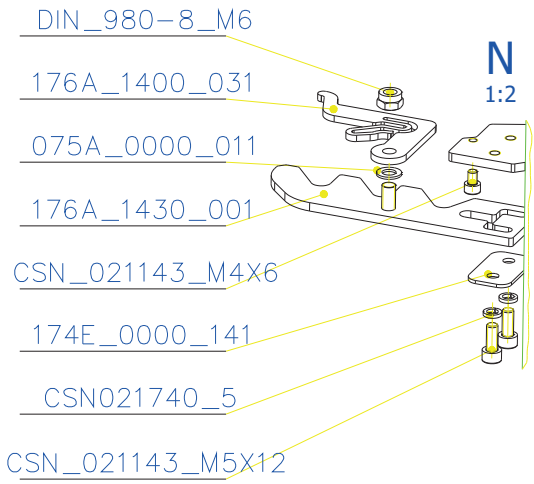


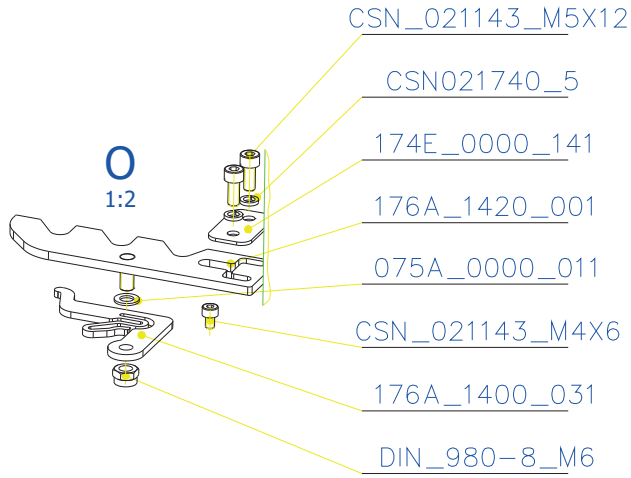


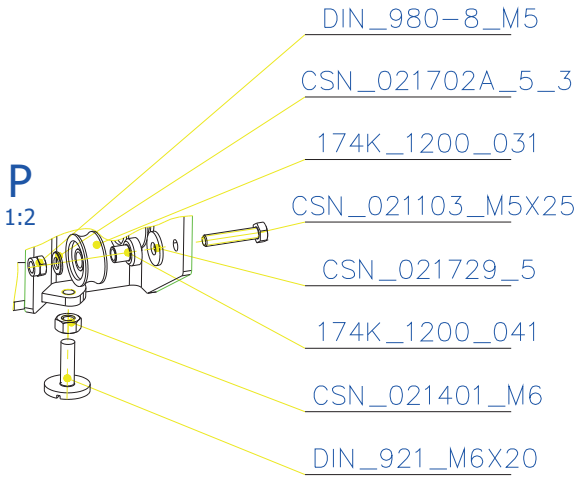


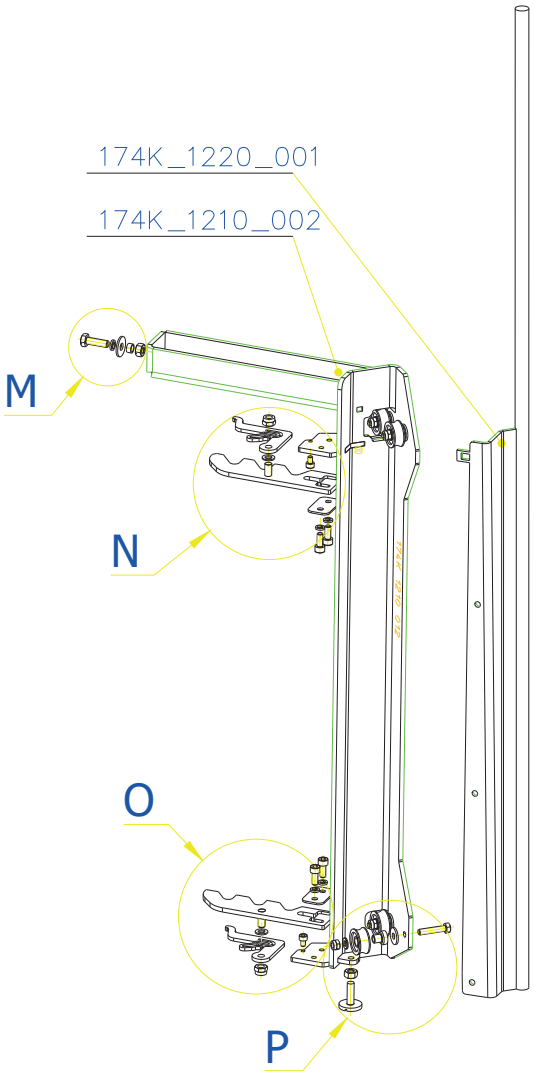

# SCAN 5004 FR

## SPARE PARTS

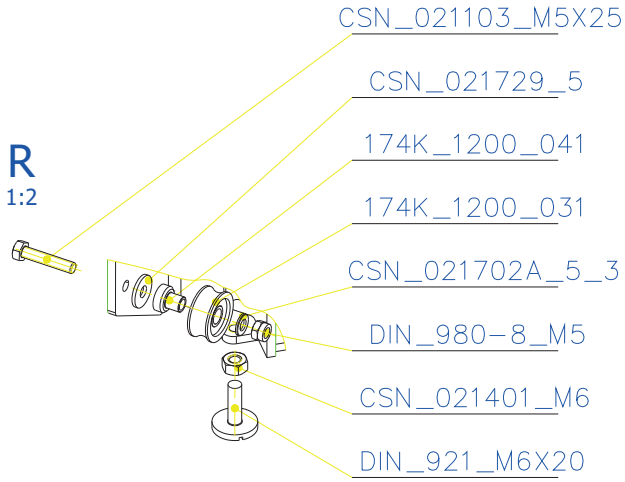


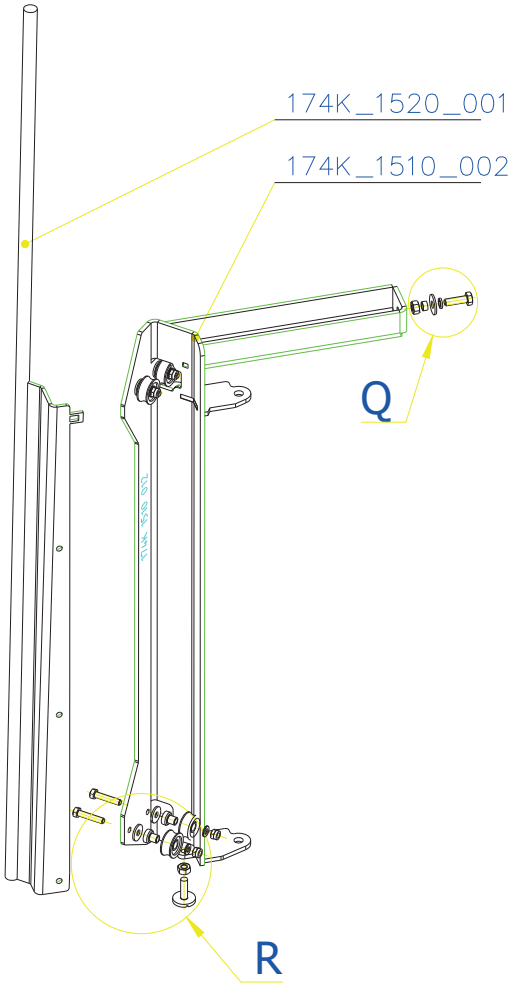


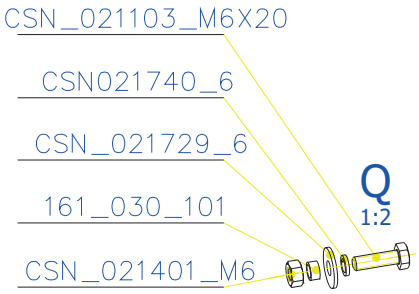

# SCAN 5004 FR

## SPARE PARTS

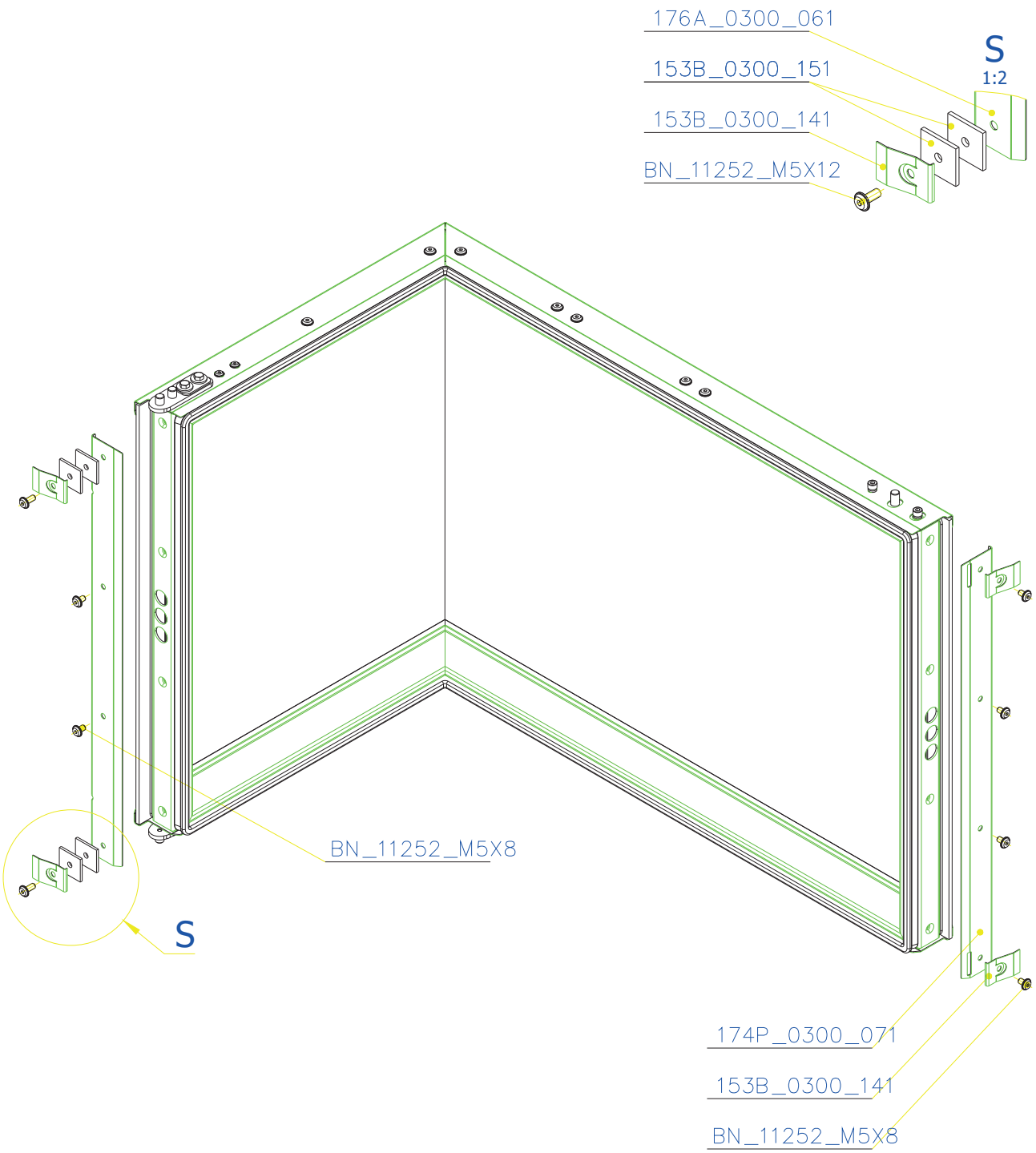

# SCAN 5004 FR

## SPARE PARTS

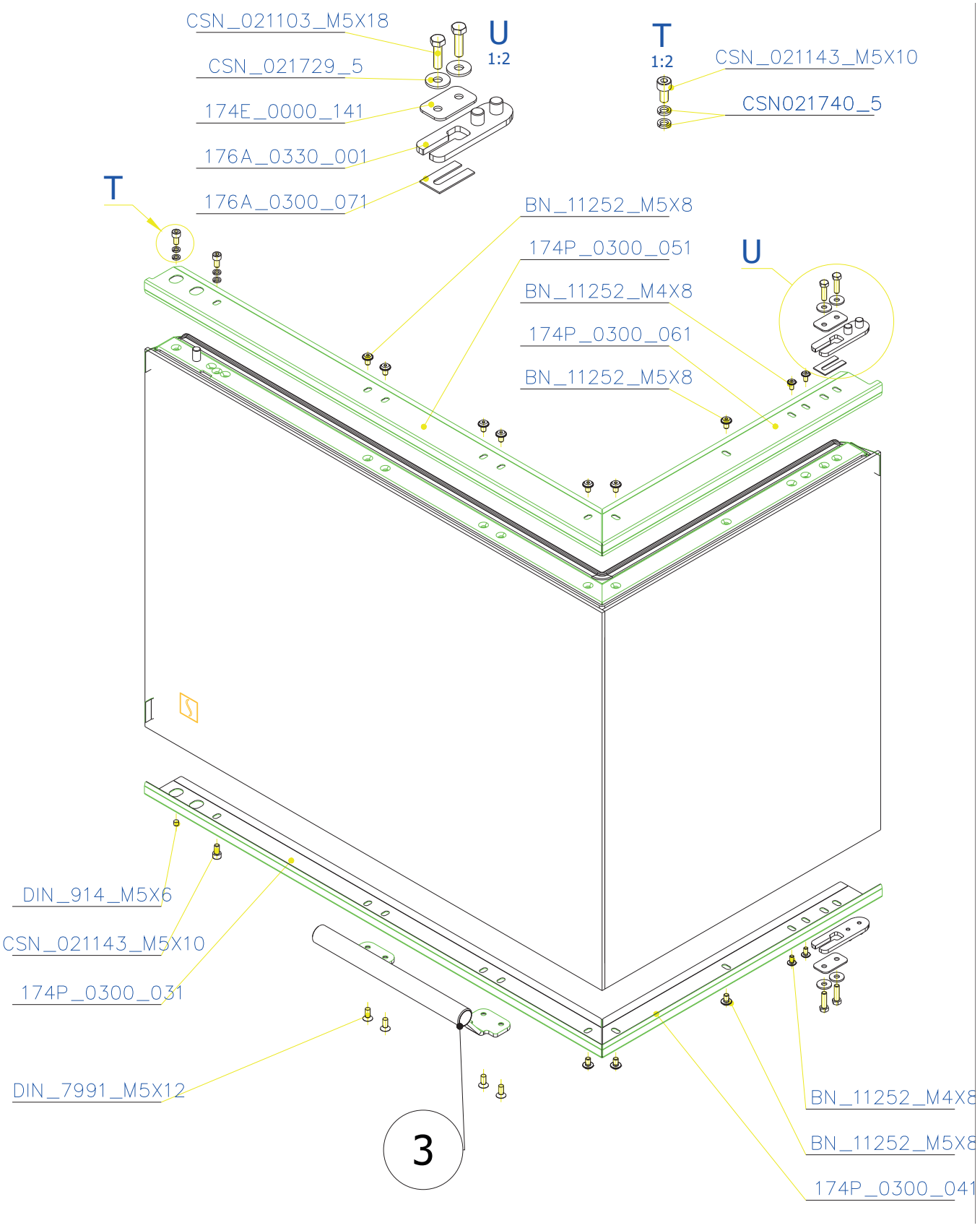

# SCAN 5004 FR
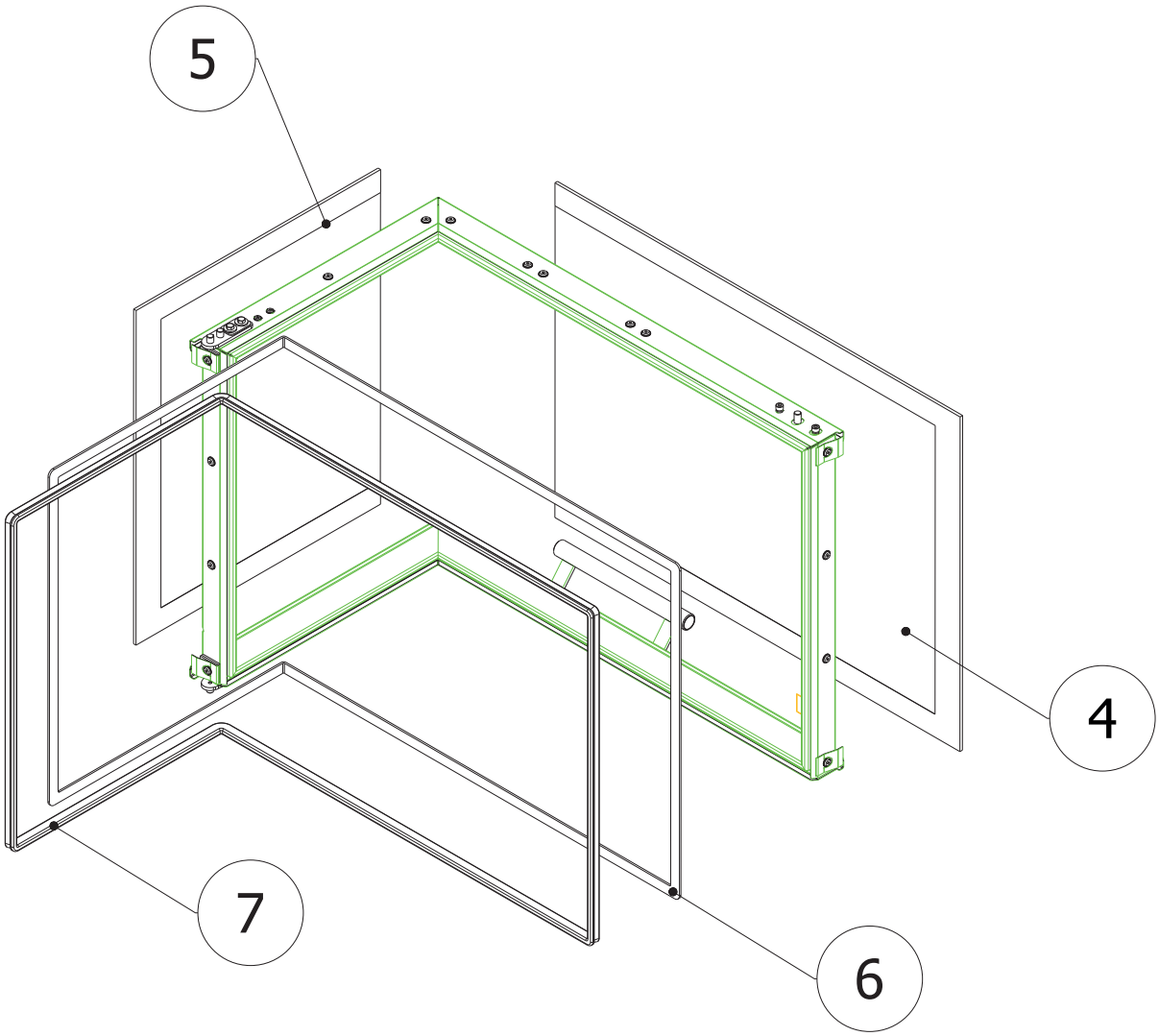
## SPARE PARTS